Alpenföhn®

DOLOMIT ADVANCED

CAUTION:

1. ALL SPECIFICATIONS SUBJECT TO CHANGE WITHOUT NOTICE.
2. UNDER NO CONDITION SHALL ALPENFÖHN BE LIABLE FOR ANY INDIRECT, INCIDENTAL OR CONSEQUENTIAL DAMAGES ARISING FROM ANY DEFECT OR ERROR IN THIS MANUAL OR PRODUCT.
3. PLEASE ASK FOR PROFESSIONAL HELP IF YOU ARE NOT SURE OF SAFE INSTALLATION.
4. PLEASE READ THE SAFETY INSTRUCTIONS ON OUR WEBSITE BEFORE YOU INSTALL THE PRODUCT: INFO.EKL.EU

WWW.ALPENFOEHN.DE

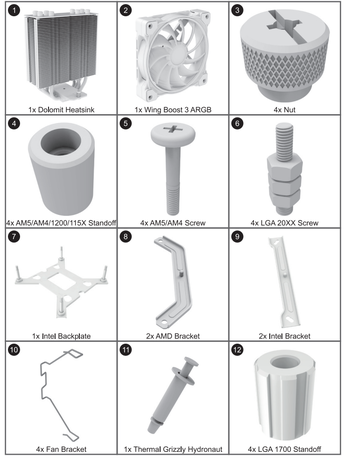

AMD LGA AM5 / AM4

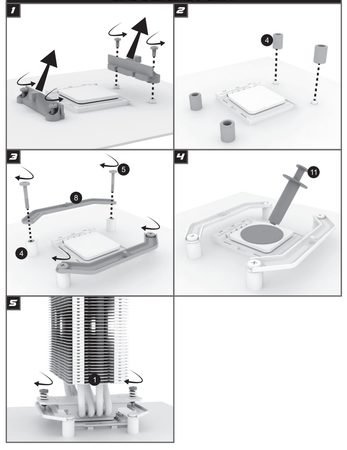

INTEL LGA 1700 / 1200 / 115X

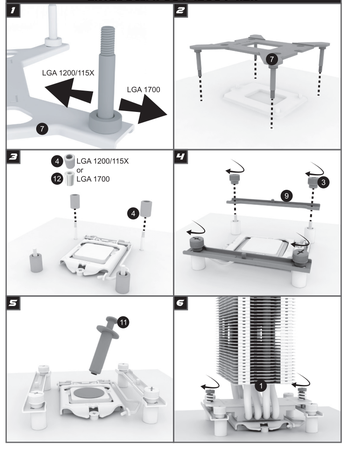

INTEL 20XX

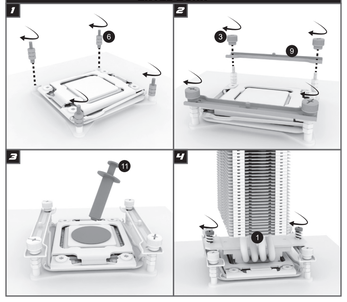
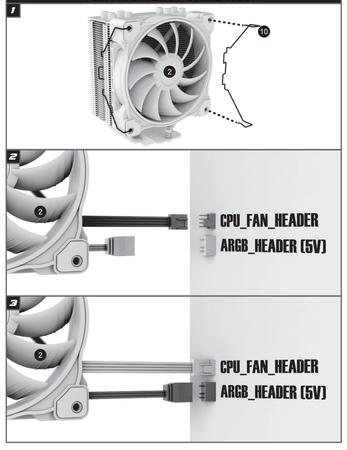
FAN MOUNTING + CONNECTION